DWG NO GA11089 SH 1

ITEM NO.	QUAN.	DESCRIPTION

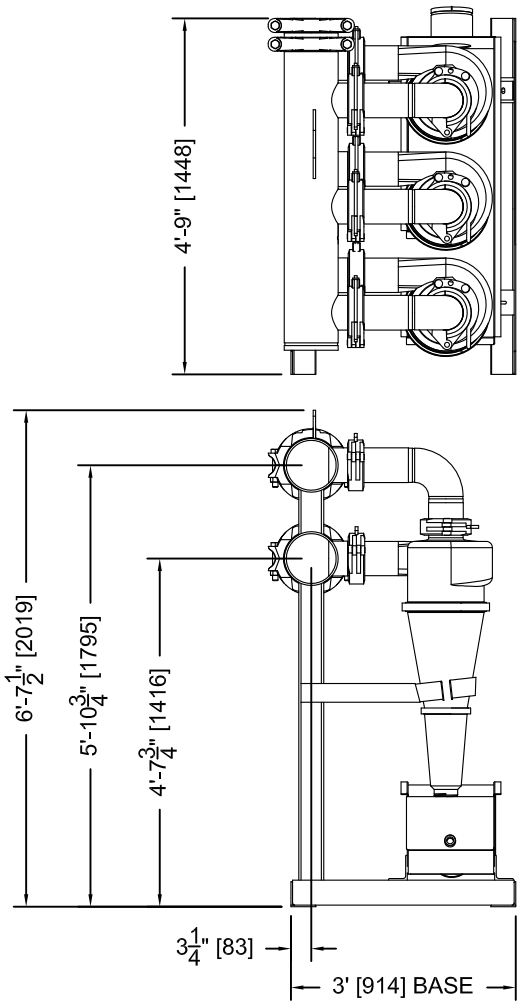

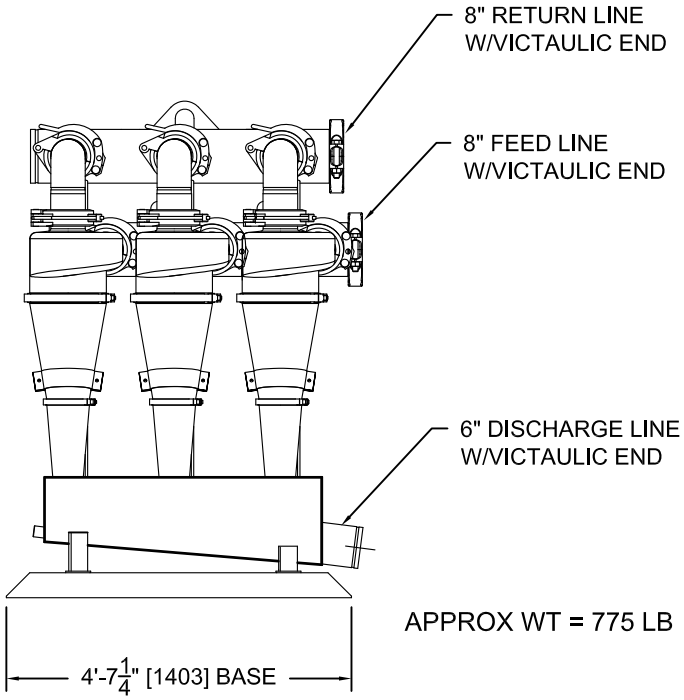

APPROX WT = 775 LB

STANDARD NOTES and TOLERANCES

ROUND ALL SHARP EDGES.
ALL FINISHES 250 RMS, UNLESS OTHERWISE NOTED.
UNLESS OTHERWISE SPECIFIED, ALL DIMENSIONS ARE IN INCHES.
MACHINED DIMENSIONS:

ANGULAR =		0°30'±	
LINEAR =	.X =	.050±	
	.XX =	.015±	
	.XXX =	.005±	

FRACTION DIMENSIONS: ±1/16

ALL PLATE 2 1/2" OR GREATER TO BE UT TESTED (A 578 SEE ITP FOR ACCEPTANCE STANDARDS).
ALL PIN MATERIAL TO BE 4140 MIN YIELD 65 KSI UNL. NTD.
ALL FILLET WELDS TO BE 3/16"FILLET CONT. UNLESS OTHERWISE NOTED.
REMOVE ALL BURRS AND SHARP EDGES

1		
2		
3	1/25/05	CHANGED DESIGN COMPLETELY

PROPRIETARY INFORMATION

THIS DOCUMENT CONTAINS PROCESS SOLUTIONS INT'L PROPRIETARY AND CONFIDENTIAL INFORMATION. IT IS LOANED FOR LIMITED PURPOSES ONLY AND REMAINS THE PROPERTY OF PROCESS SOLUTIONS INT'L. IT MAY NOT BE REPRODUCED IN WHOLE OR PART OR DISCLOSED TO THIRD PARTIES WITHOUT THE PRIOR WRITTEN CONSENT OF PROCESS SOLUTIONS INT'L. THE DOCUMENT IS TO BE RETURNED TO PROCESS SOLUTIONS INT'L UPON REQUEST AND IN ALL EVENTS UPON COMPLETION OF THE USE FOR WHICH IT WAS LOANED.

ORDER:			
PROJECT NAME:			
QA/QC BY.			
DRAWN BY	LG	DATE	11/15/07
CHECKED BY	LG	DATE	11/15/07
APPROVAL	LG	DATE	11/15/07

PSI Process Solutions International
20322 Hufsmith-Kohrville RD., Tomball, Texas 77375 (281) 320-7512

TITLE:
GENERAL ARRANGEMENT
3–10 DESANDER

PROJECT DESCRIPTION:

DRAWING NO.:	SCALE:	REV.:
GA11089	NTS	1

DWG NO GA11089 SH 1