DWG NO GA10981 SH

ITEM NO.	QUAN.	DESCRIPTION
1	1	CLAMP, 12" VIC #75
2	1	WELDMENT, TOP PIECE, 10982
3	1	PLUG, 1/2" NPT
4	1	WELDMENT, BOTTOM PIECE, 10983
5	1	SCREEN, 10984
6	1	PLUG, 1 1/2" NPT

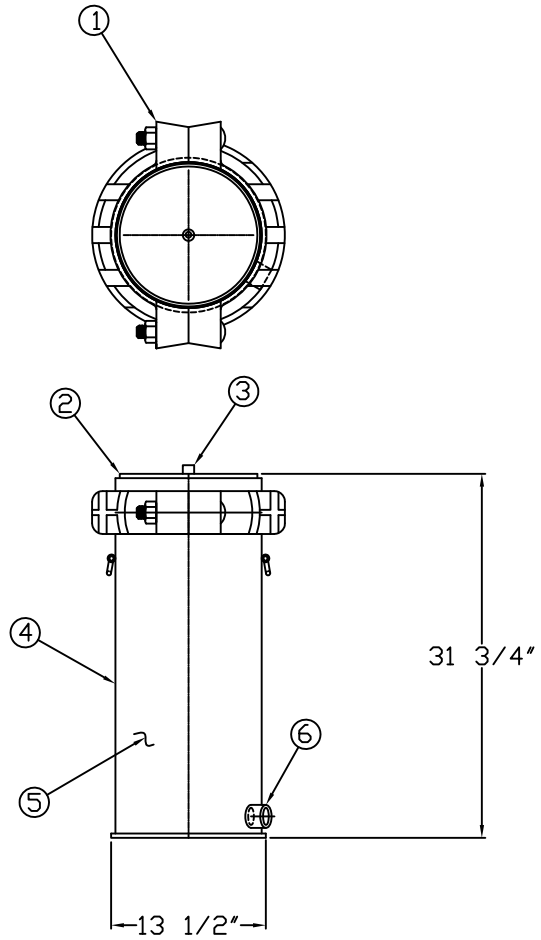

STANDARD NOTES and TOLERANCES

ROUND ALL SHARP EDGES.
ALL FINISHES 250 RMS, UNLESS OTHERWISE NOTED.
UNLESS OTHERWISE SPECIFIED, ALL DIMENSIONS ARE IN INCHES.
MACHINED DIMENSIONS:

ANGULAR = 0°30'±
LINEAR = .X = .050±
.XX = .015±
.XXX = .005±

FRACTION DIMENSIONS: ±1/16

ALL PLATE 2 1/2" OR GREATER TO BE UT TESTED (A 578 SEE ITP FOR ACCEPTANCE STANDARDS).
ALL PIN MATERIAL TO BE 4140 MIN YIELD 85 KSI UNL. NTD.
ALL FILLET WELDS TO BE 3/16"FILLET CONT. UNLESS OTHERWISE NOTED.
REMOVE ALL BURRS AND SHARP EDGES

	DATE	REVISION DESCRIPTION	INITIALS
△			
△			
△			
△			
△			
△			
△			

PROPRIETARY INFORMATION

THIS DOCUMENT CONTAINS PROCESS SOLUTIONS INT'L PROPRIETARY AND CONFIDENTIAL INFORMATION. IT IS LOANED FOR LIMITED PURPOSES ONLY AND REMAINS THE PROPERTY OF PROCESS SOLUTIONS INT'L. IT MAY NOT BE REPRODUCED IN WHOLE OR PART OR DISCLOSED TO THIRD PARTIES WITHOUT THE PRIOR WRITTEN CONSENT OF PROCESS SOLUTIONS INT'L. THE DOCUMENT IS TO BE RETURNED TO PROCESS SOLUTIONS INT'L UPON REQUEST AND IN ALL EVENTS UPON COMPLETION OF THE USE FOR WHICH IT WAS LOANED.

ORDER:
PROJECT NAME:
QA/QC BY.
DRAWN BY LG DATE 12/12/06
CHECKED BY DATE
APPROVAL DATE

PSI
5119 Hiltonview Road
Houston, TX 77086
281-893-4774
281-893-1027 FAX

TITLE:
GENERAL ARRANGEMENT
GA10981

PROJECT DESCRIPTION:
DRAWING NO.: GA10981
SCALE:
REV.:

DWG NO GA10981 SH