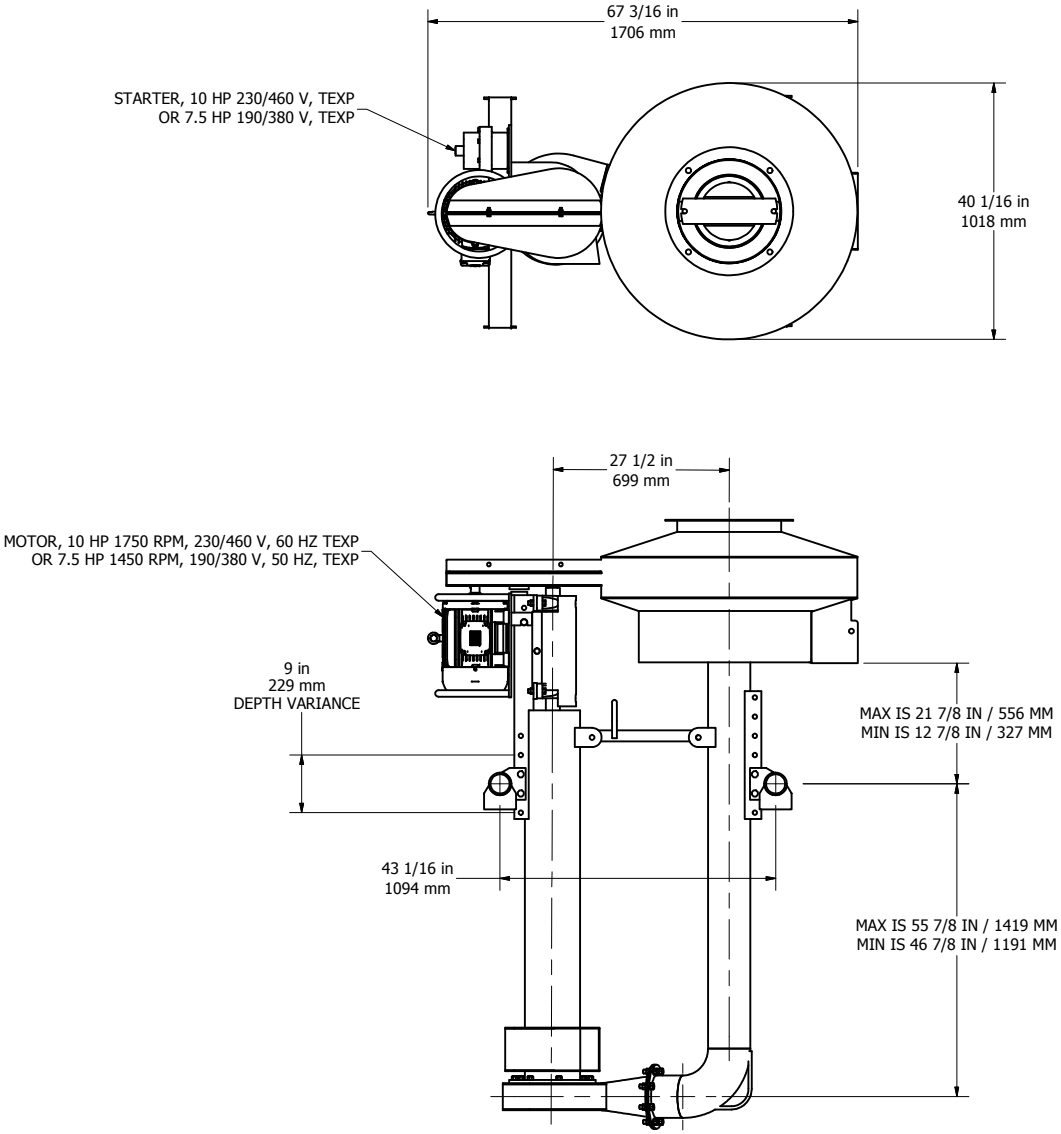

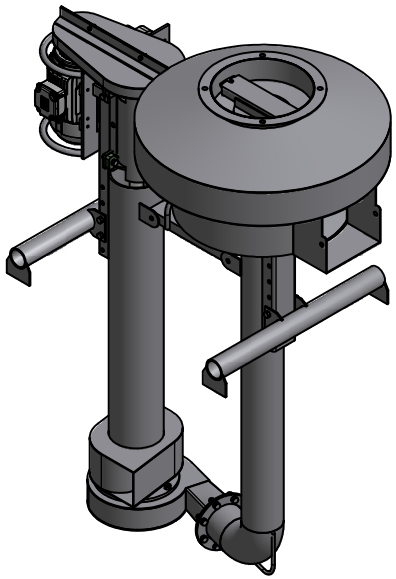

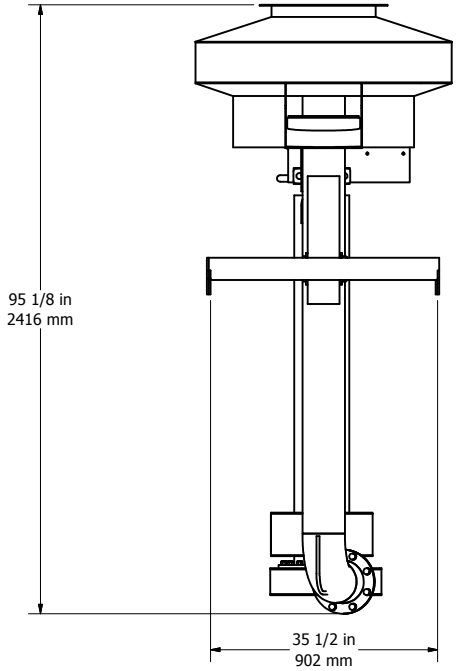

NOTES:

1. APPROXIMATE WEIGHT IS 1000 LB (455 KG).

DRAWN LG	7/1/2010	PSI 7519 Prarie Oak Dr Houston, TX 77086 281-893-4774 281-893-1027 FAX
CHECKED		TITLE: GENERAL ARRANGEMENT, STANDARD TANK ATMOSPHERIC DEGASSER
QA		
MFG		
APPROVED		SIZE C / DWG NO GA10748 / REV
		SCALE / SHEET 1 OF 1