DWG NO CP6X5X11284T_286T SH 1

ITEM NO.	QUAN.	DESCRIPTION	LENGTH FT.	IN.	WT.

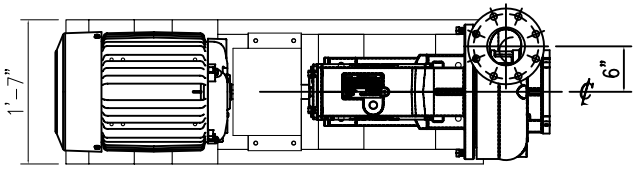

PLAN VIEW
1 1/2"=1'-0"

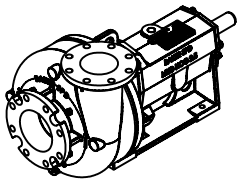

ISO METRIC VIEW (PUMP ONLY)
1 1/2" = 1'-0"

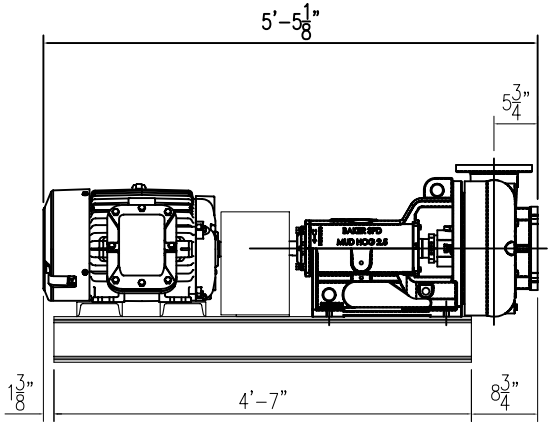

ELEVATION
1 1/2" = 1'-0"

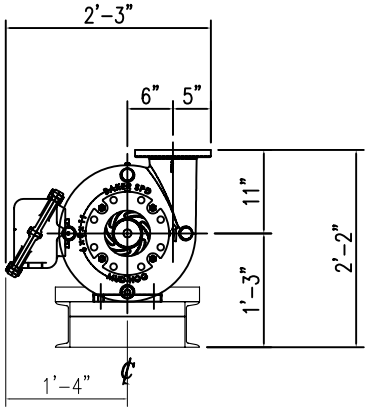

END VIEW
1 1/2"=1'-0"

STANDARD NOTES and TOLERANCES

ROUND ALL SHARP EDGES.
ALL FINISHES 250 RMS, UNLESS OTHERWISE NOTED.
UNLESS OTHERWISE SPECIFIED, ALL DIMENSIONS ARE IN INCHES.
MACHINED DIMENSIONS:
ANGULAR = 0°30'±
LINEAR = .X = .050±
.XX = .015±
.XXX = .005±
FRACTION DIMENSIONS: ±1/16

ALL PLATE 2 1/2" OR GREATER TO BE UT TESTED (A 578 SEE ITP FOR ACCEPTANCE STANDARDS).
ALL PIN MATERIAL TO BE 4140 MIN YIELD 85 KSI UNL. NTD.
ALL FILLET WELDS TO BE 3/8NEC CONT. UNLESS OTHERWISE NOTED.
REMOVE ALL BURRS AND SHARP EDGES

REV.	DATE:	DESCRIPTION	DRW BY:	CHK BY:	APP BY:

PROPRIETARY INFORMATION

THIS DOCUMENT CONTAINS PROCESS SOLUTIONS INT'L PROPRIETARY AND CONFIDENTIAL INFORMATION. IT IS LOANED FOR LIMITED PURPOSES ONLY AND REMAINS THE PROPERTY OF PROCESS SOLUTIONS INT'L. IT MAY NOT BE REPRODUCED IN WHOLE OR PART OR DISCLOSED TO THIRD PARTIES WITHOUT THE PRIOR WRITTEN CONSENT OF PROCESS SOLUTIONS INT'L. THE DOCUMENT IS TO BE RETURNED TO PROCESS SOLUTIONS INT'L. UPON REQUEST AND IN ALL EVENTS UPON COMPLETION OF THE USE FOR WHICH IT WAS LOANED.

ORDER:		
PROJECT NAME:		
QA/QC BY.		
DRAWN BY	R.X.X.	DATE 05/06/04
CHECKED BY	L.C.G.	DATE 05/06/04
APPROVAL	D.K.	DATE 05/06/04

PSI Process Solutions International
20322 Hufsmith-Kohrville RD., Tomball, Texas 77375 (281) 320-7512

TITLE: CENTRIFUGAL PUMP
MUD HOG 6x5x11
284T/286T MOTOR

PROJECT DESCRIPTION:

DRAWING NO.: CP6X5X11284T_286T | SCALE: 1 1/2"=1'-0" | REV.: 0

DWG NO CP6X5X11284T_286T SH 1