DWG NO GA11699 SH

ITEM NO.	QUAN.	DESCRIPTION
1	1	PUMP, M2801 PC PUMP
2	1	GEARBOX, SHIMPO MECHANICAL VARIABLE SPEED NMA-91
3	1	MOTOR, 15 HP 1750 RPM TEXP
4	1	WELDMENT, SKID FOR AN M2801SX-15N
5	1	COUPLING GUARD
6	1	COUPLING SLEEVE, 8S
7	1	COUPLING FLANGE PUMP & GB SIDE, 8S X 1 7/8

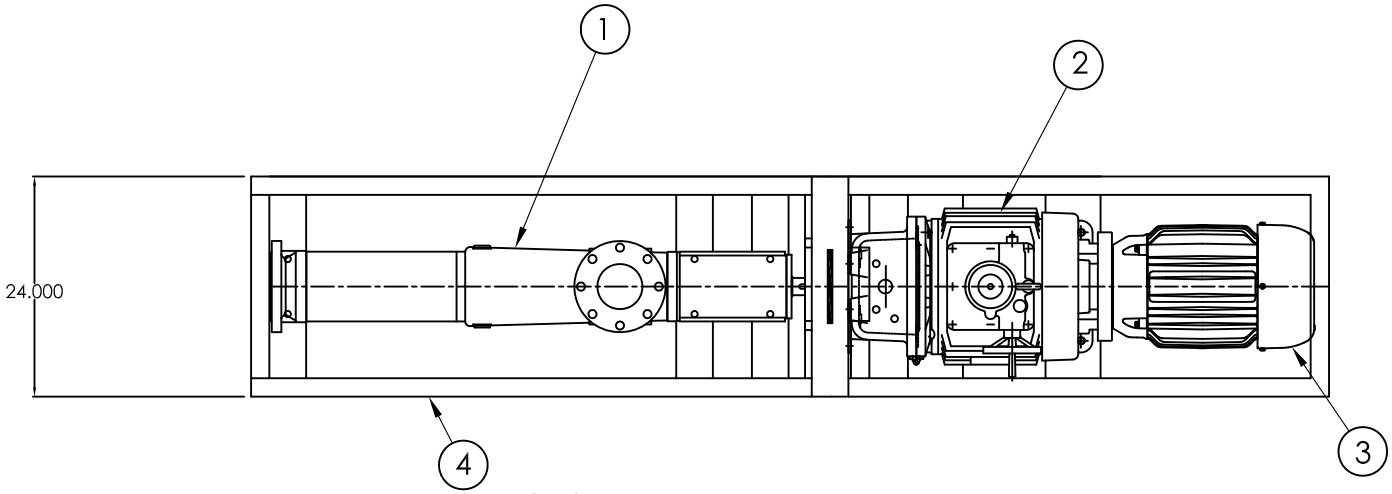

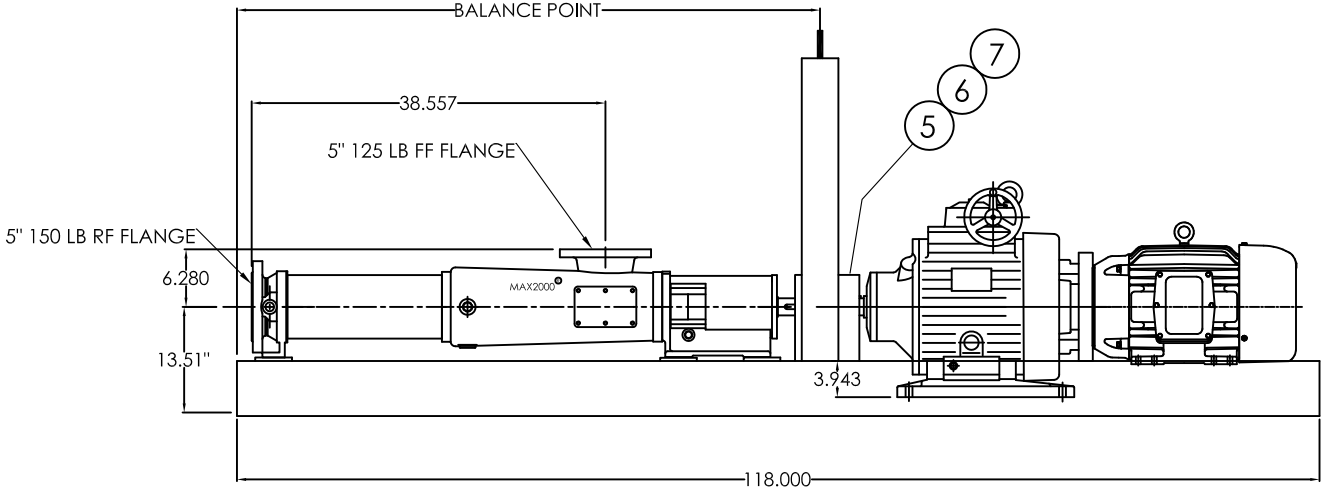

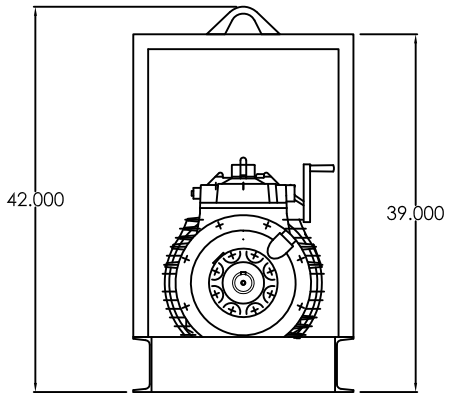

STANDARD NOTES and TOLERANCES

ROUND ALL SHARP EDGES.
ALL FINISHES 250 RMS, UNLESS OTHERWISE NOTED.
UNLESS OTHERWISE SPECIFIED, ALL DIMENSIONS ARE IN INCHES.
MACHINED DIMENSIONS:

ANGULAR =	0°30'±		
LINEAR =	.X =	.050±	
	.XX =	.015±	
	.XXX =	.005±	

FRACTION DIMENSIONS: ±1/16

ALL PLATE ≥ 1/2" OR GREATER TO BE UT TESTED (A 578 SEE ITP FOR ACCEPTANCE STANDARDS).
ALL PIN MATERIAL TO BE 4140 MIN YIELD 85 KSI UNL. NTD.
ALL FILLET WELDS TO BE 3/16"FILLET CONT. UNLESS OTHERWISE NOTED.
REMOVE ALL BURRS AND SHARP EDGES

	DATE	REVISION DESCRIPTION	INITIALS

PROPRIETARY INFORMATION

THIS DOCUMENT CONTAINS PROCESS SOLUTIONS INT'L PROPRIETARY AND CONFIDENTIAL INFORMATION. IT IS LOANED FOR LIMITED PURPOSES ONLY AND REMAINS THE PROPERTY OF PROCESS SOLUTIONS INT'L. IT MAY NOT BE REPRODUCED IN WHOLE OR PART OR DISCLOSED TO THIRD PARTIES WITHOUT THE PRIOR WRITTEN CONSENT OF PROCESS SOLUTIONS INT'L. THE DOCUMENT IS TO BE RETURNED TO PROCESS SOLUTIONS INT'L UPON REQUEST AND IN ALL EVENTS UPON COMPLETION OF THE USE FOR WHICH IT WAS LOANED.

ORDER:
PROJECT NAME:
QA/QC BY:
DRAWN BY LG DATE 2/19/10
CHECKED BY DATE
APPROVAL DATE

PSI Process Solutions International
5119 HILTONVIEW RD, HOUSTON,TX 77086, (281)893-4774

TITLE:
GENERAL ARRANGEMENT, M2801SX-15N

PROJECT DESCRIPTION:
DRAWING NO. GA11699 SCALE: REV.:

DWG NO GA11699 SH