DWG NO GA11481 SH 1

ITEM NO.	QUAN.	DESCRIPTION

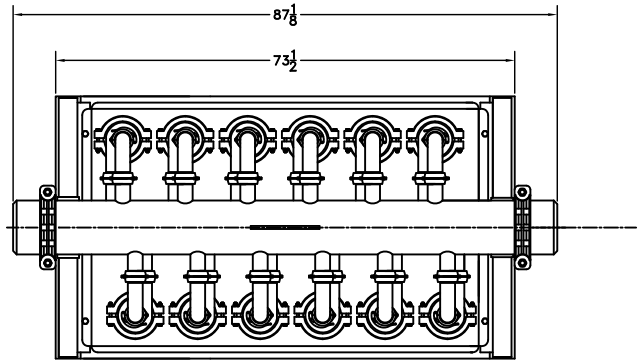

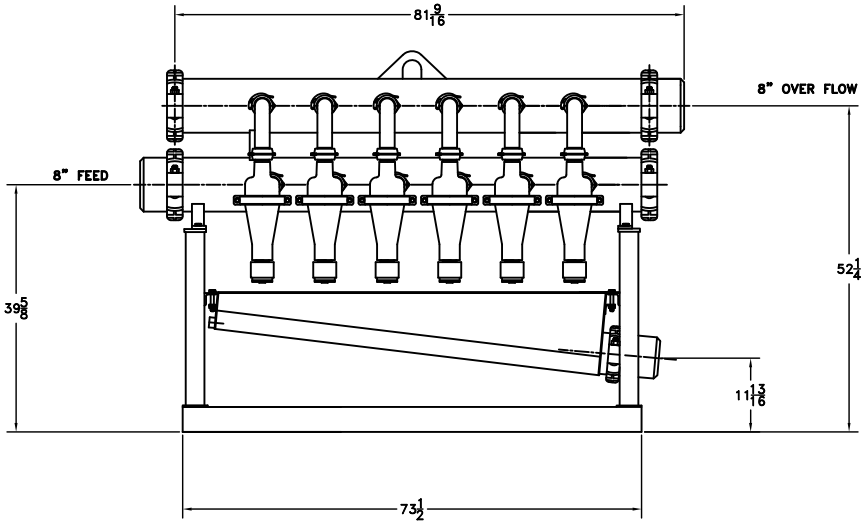

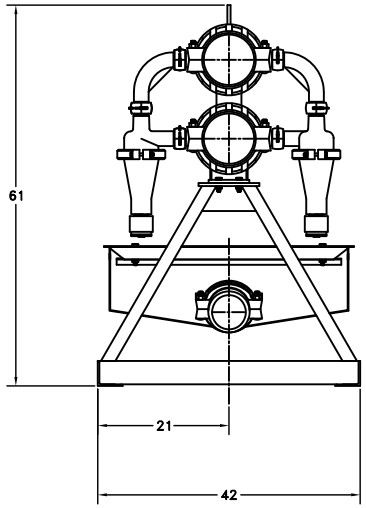

STANDARD NOTES and TOLERANCES

ROUND ALL SHARP EDGES.
ALL FINISHES 250 RMS, UNLESS OTHERWISE NOTED.
UNLESS OTHERWISE SPECIFIED, ALL DIMENSIONS ARE IN INCHES.
MACHINED DIMENSIONS:

ANGULAR =	0°30'±	
LINEAR = .X =	.050±	
.XX =	.015±	
.XXX =	.005±	

FRACTION DIMENSIONS: ±1/16

ALL PLATE 2 1/2" OR GREATER TO BE UT TESTED (A 578 SEE ITP FOR ACCEPTANCE STANDARDS).
ALL PIN MATERIAL TO BE 4140 MIN YIELD 85 KSI UNL. NTD.
ALL FILLET WELDS TO BE 3/16"FILLET CONT. UNLESS OTHERWISE NOTED.
REMOVE ALL BURRS AND SHARP EDGES

1	1/25/05	CHANGED DESIGN COMPLETELY

PROPRIETARY INFORMATION

THIS DOCUMENT CONTAINS PROCESS SOLUTIONS INT'L. PROPRIETARY AND CONFIDENTIAL INFORMATION. IT IS LOANED FOR LIMITED PURPOSES ONLY AND REMAINS THE PROPERTY OF PROCESS SOLUTIONS INT'L. IT MAY NOT BE REPRODUCED IN WHOLE OR PART OR DISCLOSED TO THIRD PARTIES WITHOUT THE PRIOR WRITTEN CONSENT OF PROCESS SOLUTIONS INT'L. THE DOCUMENT IS TO BE RETURNED TO PROCESS SOLUTIONS INT'L UPON REQUEST AND IN ALL EVENTS UPON COMPLETION OF THE USE FOR WHICH IT WAS LOANED.

ORDER:			
PROJECT NAME:			
QA/QC BY.			
DRAWN BY	LG	DATE	6/2/09
CHECKED BY	LG	DATE	6/2/09
APPROVAL	LG	DATE	6/2/09

PSI Process Solutions International
20322 Hufsmith-Kohrville RD., Tomball, Texas 77375 (281) 320-7512

TITLE:

GENERAL ARRANGEMENT 12-4 DESILTER

PROJECT DESCRIPTION:

DRAWING NO.: GA11481 SCALE: NTS REV.: 1

DWG NO GA11481 SH 1