DWG NO GA10843 SH 1

ITEM NO.	QUAN.	PART #	DESCRIPTION
1	1	MH-JN	NOZZLE, JET
2	1	06-BF	BUTTERFLY VALVE, 6"
3	1	10842	SACK TABLE
4	1	10843-1	BOTTOM NIPPLE
5	1	10843	BASE
6	1	10870	VENTURI, 6" MUD HOPPER

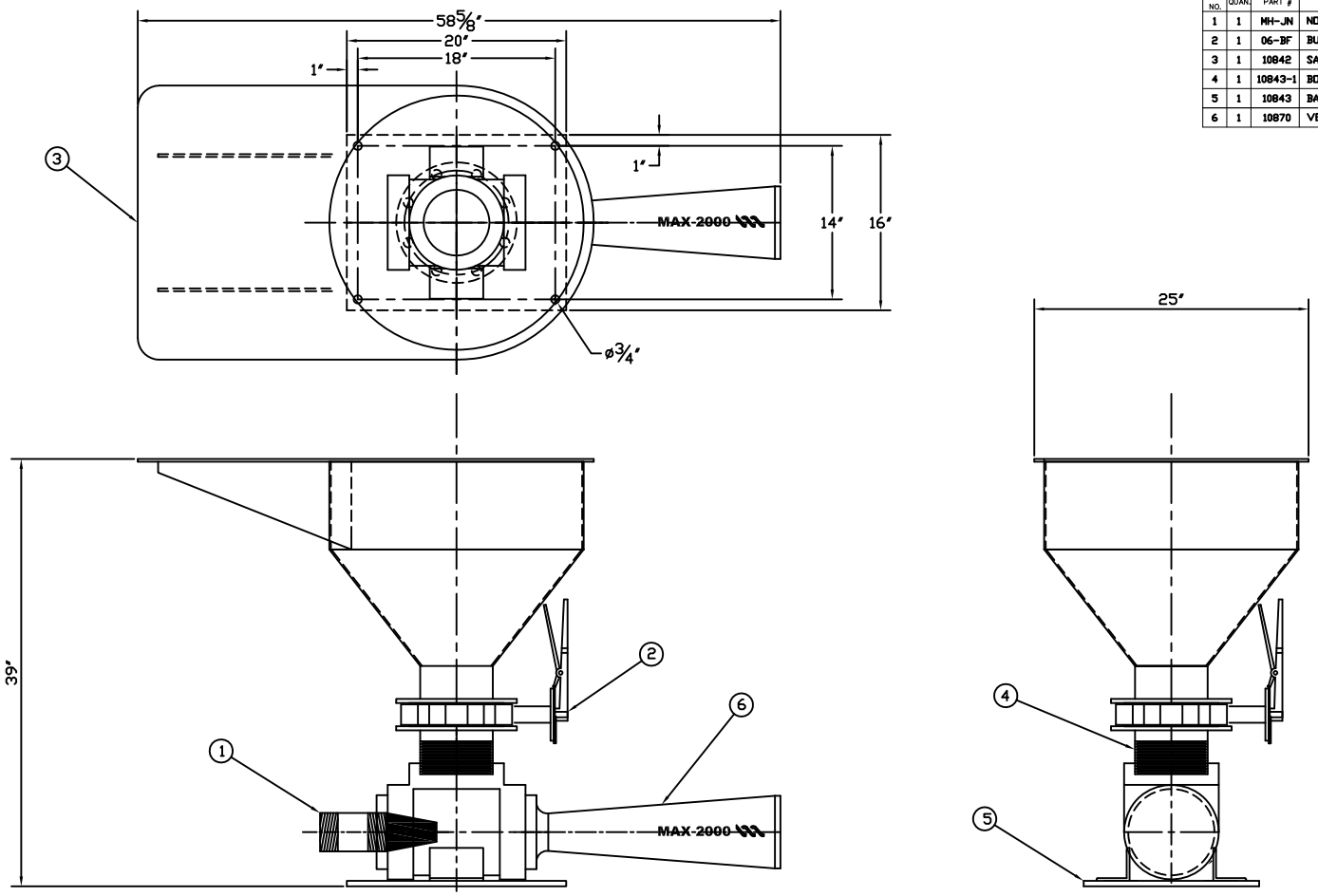

NOTES:

1. APPROXIMATE WT IS 315 LB (143 kg)

STANDARD NOTES and TOLERANCES

ROUND ALL SHARP EDGES.
ALL FINISHES 250 RMS, UNLESS OTHERWISE NOTED.
UNLESS OTHERWISE SPECIFIED, ALL DIMENSIONS ARE IN INCHES.
MACHINED DIMENSIONS:

ANGULAR =		0°30'±	
LINEAR =	.X =	.050±	
	.XX =	.015±	
	.XXX =	.005±	

FRACTION DIMENSIONS: ±1/16

ALL PLATE ≥ 1/2" OR GREATER TO BE UT TESTED (A 578 SEE ITP FOR ACCEPTANCE STANDARDS).
ALL PIN MATERIAL TO BE 4140 MIN YIELD 85 KSI UNL. NTD.
ALL FILLET WELDS TO BE 3/16"FILLET CONT. UNLESS OTHERWISE NOTED.
REMOVE ALL BURRS AND SHARP EDGES

PROPRIETARY INFORMATION

THIS DOCUMENT CONTAINS PROCESS SOLUTIONS INT'L PROPRIETARY AND CONFIDENTIAL INFORMATION. IT IS LOANED FOR LIMITED PURPOSES ONLY AND REMAINS THE PROPERTY OF PROCESS SOLUTIONS INT'L. IT MAY NOT BE REPRODUCED IN WHOLE OR PART OR DISCLOSED TO THIRD PARTIES WITHOUT THE PRIOR WRITTEN CONSENT OF PROCESS SOLUTIONS INT'L. THE DOCUMENT IS TO BE RETURNED TO PROCESS SOLUTIONS INT'L UPON REQUEST AND IN ALL EVENTS UPON COMPLETION OF THE USE FOR WHICH IT WAS LOANED.

ORDER:
PROJECT NAME:
QA/QC BY.
DRAWN BY LG DATE 10/3/05
CHECKED BY LG DATE 10/3/05
APPROVAL DATE

PSI Process Solutions International
5119 Hillonview Road, Houston, Texas 77086 (281) 893-4774

TITLE: GENERAL ARRANGEMENT 6" MUD HOPPER
PROJECT DESCRIPTION:
DRAWING NO.: GA10843 SCALE: NTS REV.: 1